Aluminum & cast iron shaft mounted gearboxes

A modular and compact product

Gears
Hardened and ground gears

Alloy housing
Is vacuum impregnated (MIL-STD 276) for protection and sealing. No secondary finish required but readily accepts paint or cast iron for larger units.

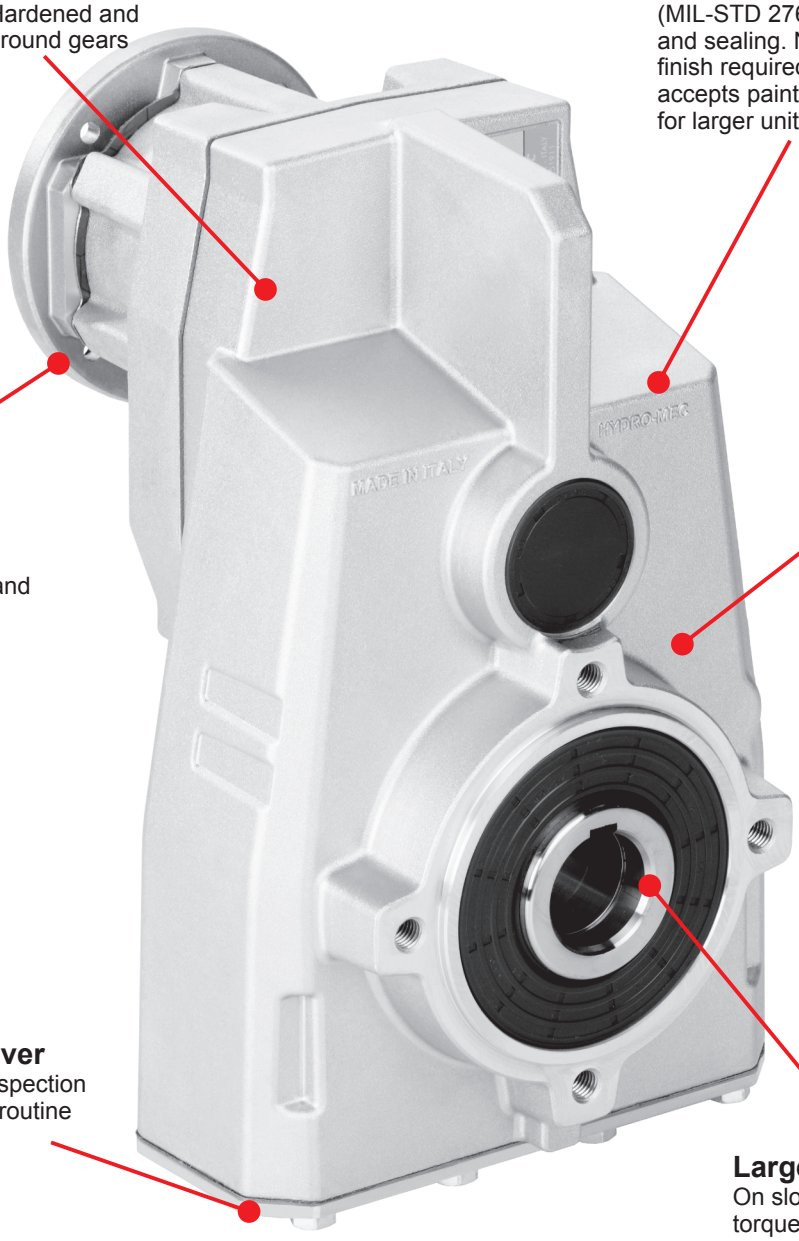

Flange
Fully modular to IEC and Compact integrated motor.
NEMA C flange

Large center distance

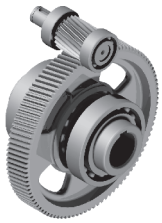

Removable inspection cover
Allows periodic inspection of gearing during routine maintenance

Large center distance
On slow gears for safe torque trasmission.

Single-piece aluminum / Cast Iron housing
Combines light weight with high tensile strength. Precision machined for alignment of bearings and gearing

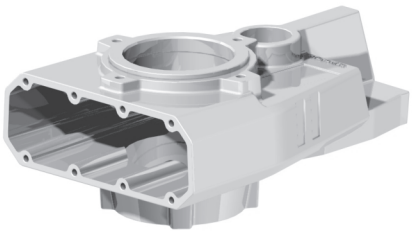

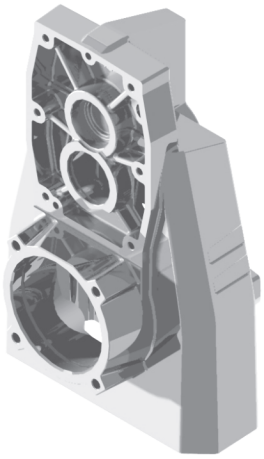

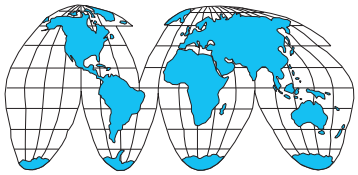

World wide sales network.