D30-EXP/01

Rightangle
Wormgearbox

SPARE PARTS / PARTI DI RICAMBIO

data 21/02/24

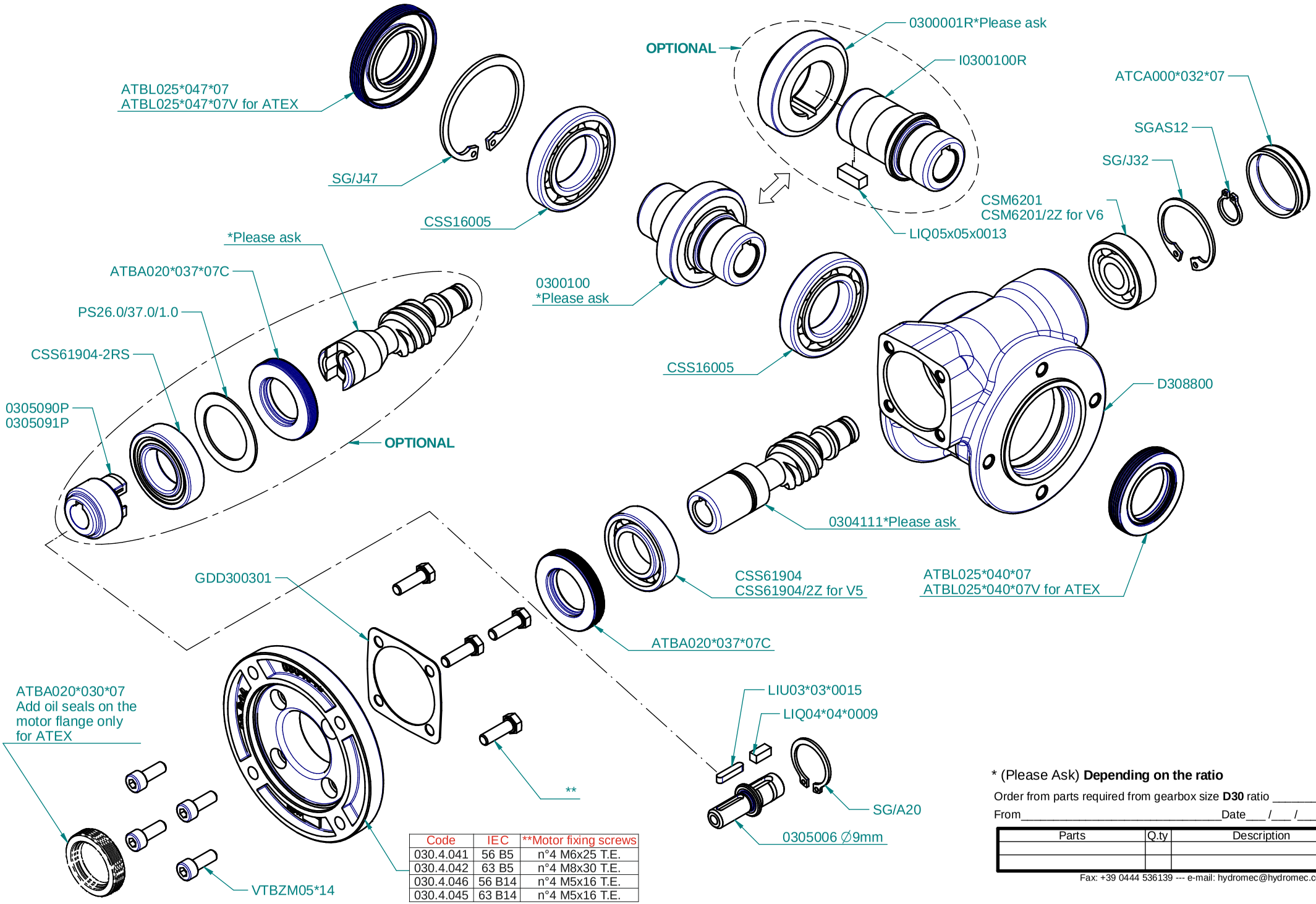

Code	IEC	**Motor fixing screws
030.4.041	56 B5	n°4 M6x25 T.E.
030.4.042	63 B5	n°4 M8x30 T.E.
030.4.046	56 B14	n°4 M5x16 T.E.
030.4.045	63 B14	n°4 M5x16 T.E.

* (Please Ask) **Depending on the ratio**

Order from parts required from gearbox size **D30** ratio _____

From_____Date___ /___ /_____

Parts	Q.ty	Description

Fax: +39 0444 536139 --- e-mail: hydromec@hydromec.com