8D4-EXP/01

Rightangle
Wormgearbox

SPARE PARTS / PARTI DI RICAMBIO

data 21/02/24

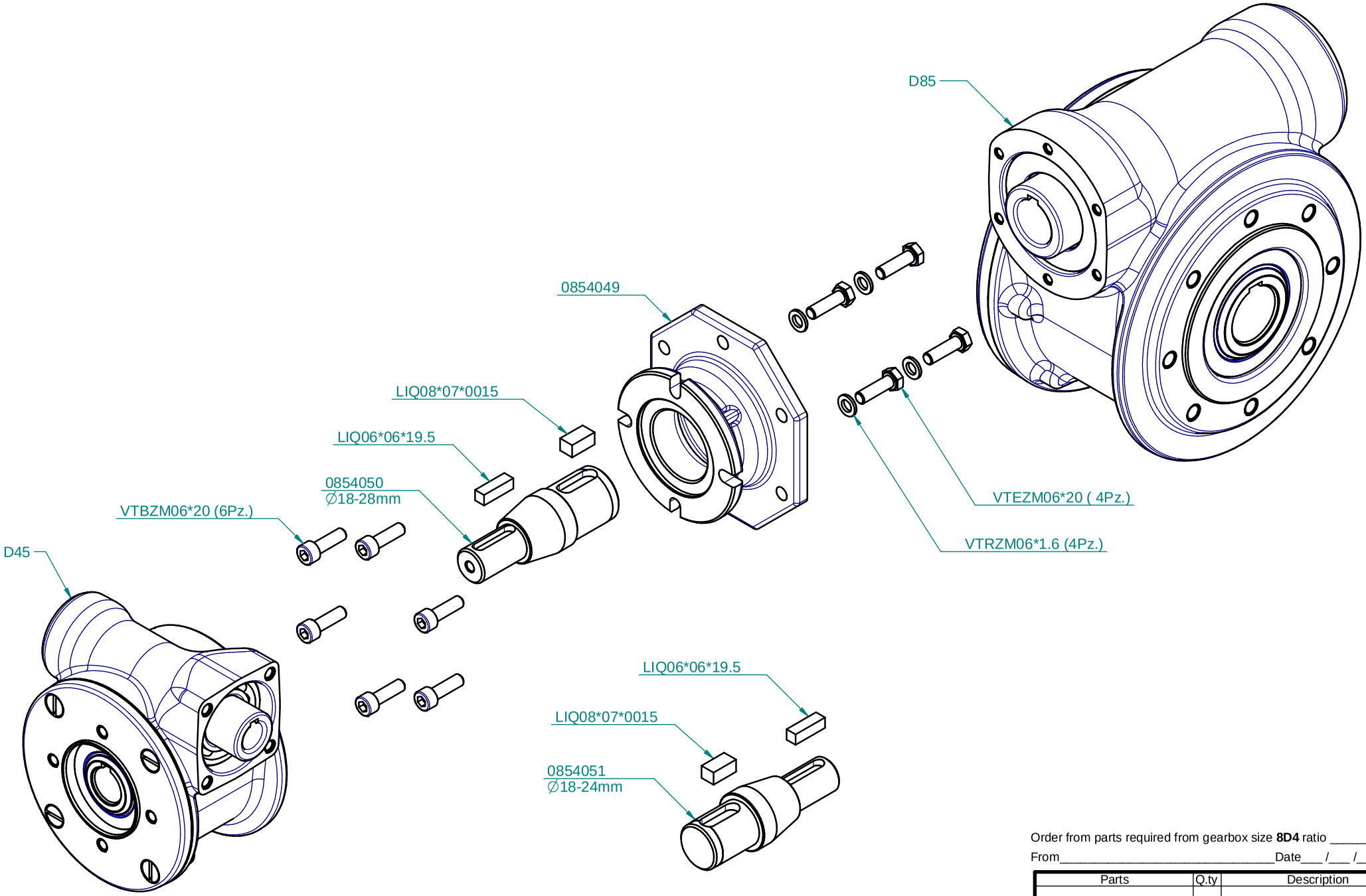

Order from parts required from gearbox size **8D4** ratio _____

From_____Date___ /___ /_____

Parts	Q.ty	Description

Fax: +39 0444 536139 --- e-mail: hydromec@hydromec.com