X42A-EXP/01

Angletech Gear
Helical bevel gearbox

SPARE PARTS / PARTI DI RICAMBIO

data 13/01/22

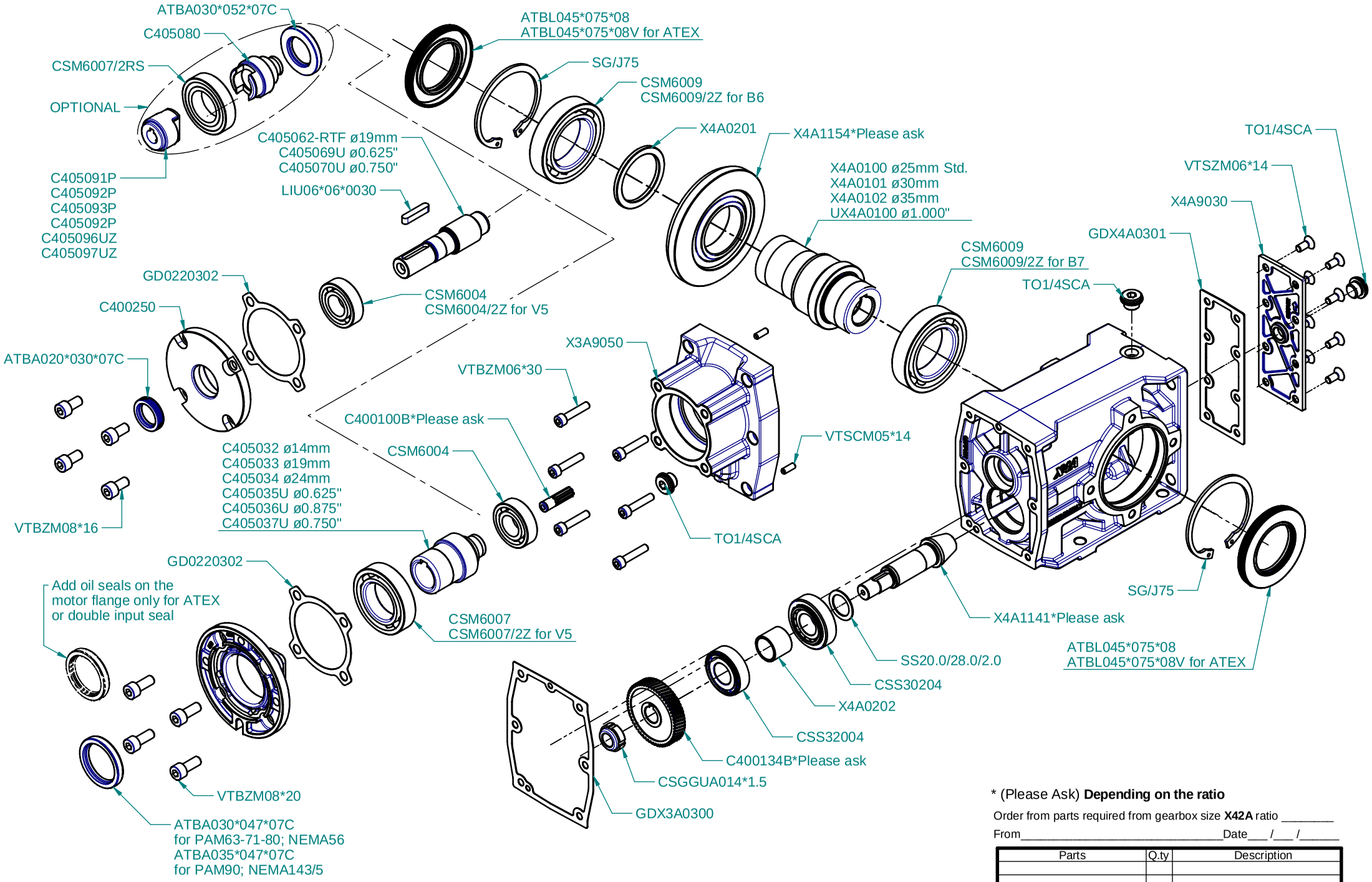

* (Please Ask) **Depending on the ratio**

Order from parts required from gearbox size **X42A** ratio _____

From_____Date___ /___ /_____

Parts	Q.ty	Description

Fax: +39 0444 536139 --- e-mail: hydromec@hydromec.com