X62A-EXP/01

Angletech Gear
Helical bevel gearbox

SPARE PARTS / PARTI DI RICAMBIO

data 13/01/22

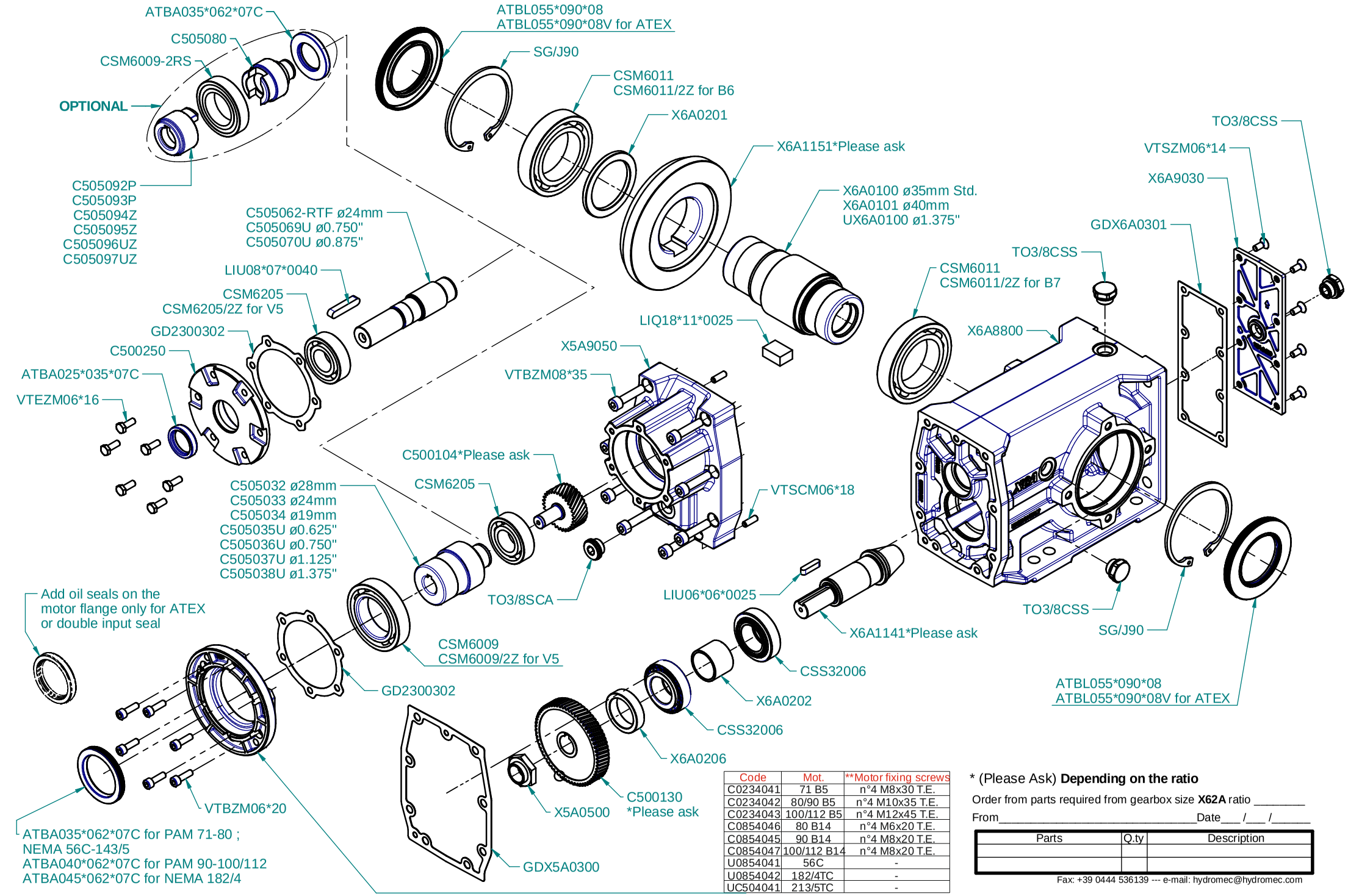

Code	Mot.	**Motor fixing screws
C0234041	71 B5	n°4 M8x30 T.E.
C0234042	80/90 B5	n°4 M10x35 T.E.
C0234043	100/112 B5	n°4 M12x45 T.E.
C0854046	80 B14	n°4 M6x20 T.E.
C0854045	90 B14	n°4 M8x20 T.E.
C0854047	100/112 B14	n°4 M8x20 T.E.
U0854041	56C	-
U0854042	182/4TC	-
UC504041	213/5TC	-

* (Please Ask) **Depending on the ratio**

Order from parts required from gearbox size **X62A** ratio _____

From_____Date___ /___ /_____

Parts	Q.ty	Description

Fax: +39 0444 536139 --- e-mail: hydromec@hydromec.com