# 133C-EXP/01

Angletech Gear
Helical bevel gearbox

**SPARE PARTS / PARTI DI RICAMBIO**

data 13/01/22

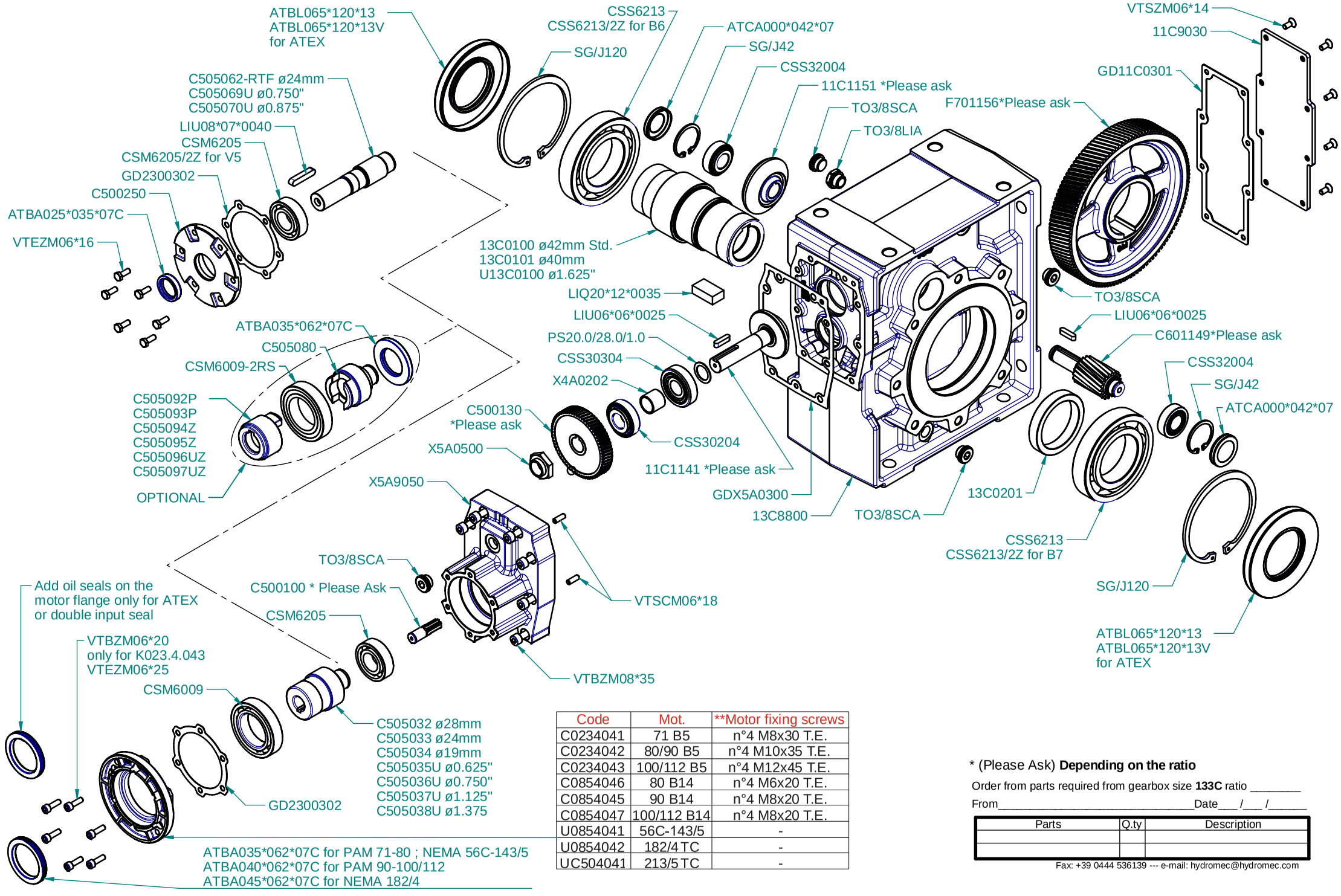


| Code | Mot. | **Motor fixing screws |
|---|---|---|
| C0234041 | 71 B5 | n°4 M8x30 T.E. |
| C0234042 | 80/90 B5 | n°4 M10x35 T.E. |
| C0234043 | 100/112 B5 | n°4 M12x45 T.E. |
| C0854046 | 80 B14 | n°4 M6x20 T.E. |
| C0854045 | 90 B14 | n°4 M8x20 T.E. |
| C0854047 | 100/112 B14 | n°4 M8x20 T.E. |
| U0854041 | 56C-143/5 | - |
| U0854042 | 182/4 TC | - |
| UC504041 | 213/5 TC | - |

* (Please Ask) **Depending on the ratio**

Order from parts required from gearbox size **133C** ratio _____

From_____Date___ /___ /_____

| Parts | Q.ty | Description |
|---|---|---|
| | | |
| | | |

Fax: +39 0444 536139 --- e-mail: hydromec@hydromec.com