X84C-EXP/01

Angletech Gear
Helical bevel gearbox

SPARE PARTS / PARTI DI RICAMBIO

data 13/01/22

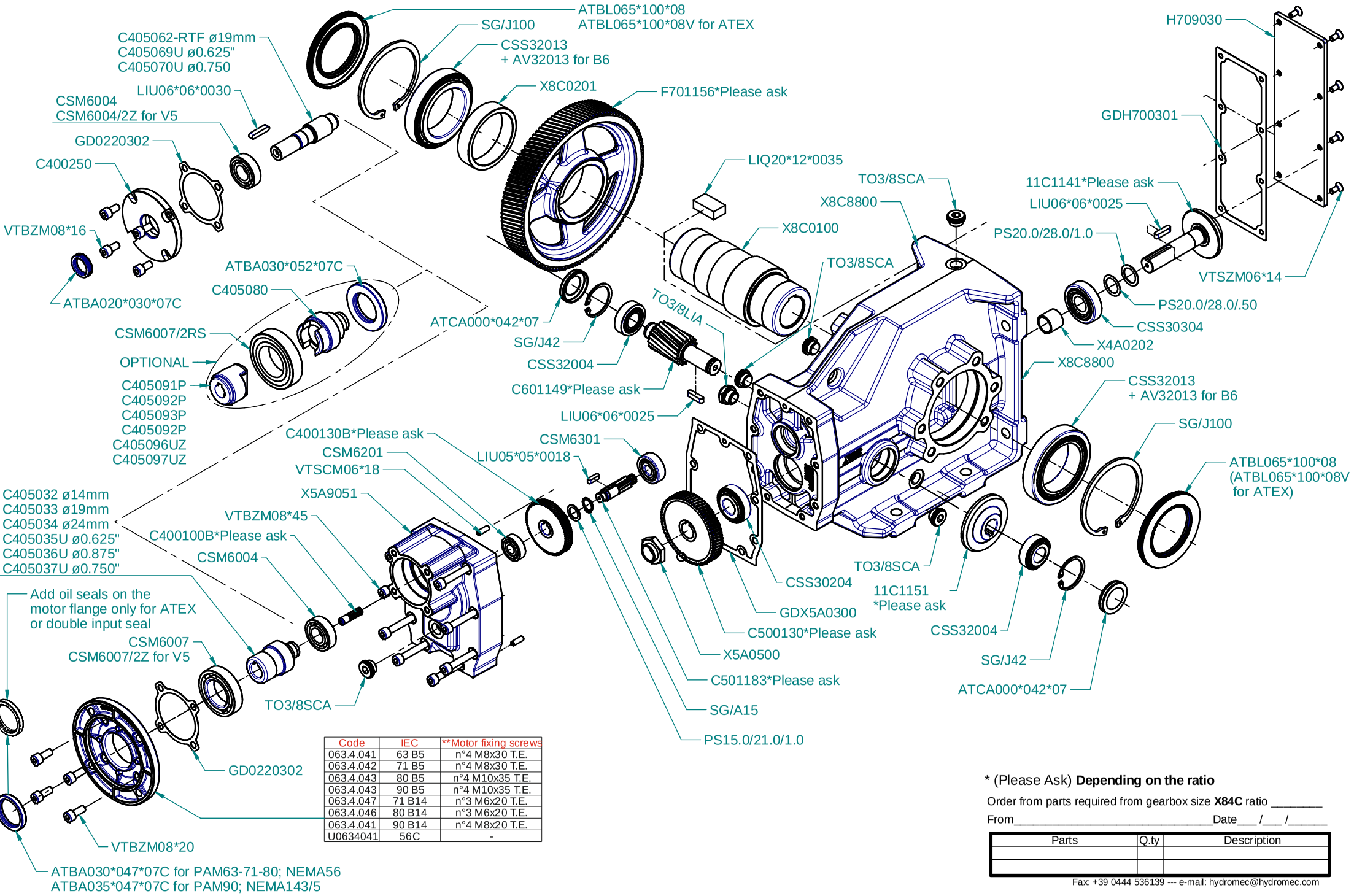

Code	IEC	**Motor fixing screws
063.4.041	63 B5	n°4 M8x30 T.E.
063.4.042	71 B5	n°4 M8x30 T.E.
063.4.043	80 B5	n°4 M10x35 T.E.
063.4.043	90 B5	n°4 M10x35 T.E.
063.4.047	71 B14	n°3 M6x20 T.E.
063.4.046	80 B14	n°3 M6x20 T.E.
063.4.041	90 B14	n°4 M8x20 T.E.
U0634041	56C	-

* (Please Ask) **Depending on the ratio**

Order from parts required from gearbox size **X84C** ratio _____

From_____Date___ /___ /_____

Parts	Q.ty	Description

Fax: +39 0444 536139 --- e-mail: hydromec@hydromec.com